arXiv:quant-ph/0503205v1 28 Mar 2005

A different kind of quantum search

Lov K. Grover *
lkgrover@bell-labs.com
Bell Laboratories, Lucent Technologies,
600-700 Mountain Avenue, Murray Hill, NJ 07974

Abstract

The quantum search algorithm consists of an alternating sequence of selective inversions and diffusion type operations, as a result of which it can find a target state in an unsorted database of size N in only $\sqrt{N}$ queries. This paper shows that by replacing the selective inversions by selective phase shifts of $\frac{\pi}{3}$, the algorithm gets transformed into something similar to a classical search algorithm. Just like classical search algorithms the algorithm has a fixed point in state-space toward which it preferentially converges. In contrast, the quantum search algorithm moves uniformly in a two-dimensional state space. This feature leads to robust search algorithms and also to conceptually new schemes for error correction.

1 Introduction

> The quantum search algorithm is like baking a souffle . . . . you have to stop at just the right time or else it gets burnt [1]

Search algorithms can be described as a rotation of the state vector in 2-dimensional Hilbert space defined by the initial and the target vectors. As we describe later, any iterative quantum procedure *has* to be a continuos rotation in state space. In the original quantum search algorithm, the state vector uniformly goes from the initial to the target and unless we stop

*Research was partly supported by NSA & ARO under contract DAAG55-98-C-0040.

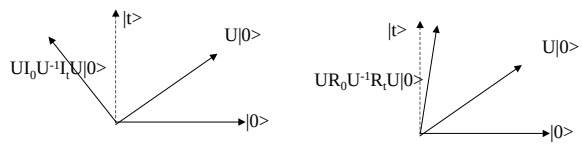

Figure 1: In the quantum search algorithm (left), the state vector overshoots the target state; in the algorithm of this paper (right), the state vector always moves towards the target.

when it is right at the target, it will drift away. For many applications, including unsorted database search, this leads to a square-root speedup over the corresponding classical algorithm. One limitation of these algorithms is that, to perform optimally, they need precise knowledge of certain problem parameters, e.g. the number of target states.

In this paper we show that by replacing the selective phase inversions in quantum search by suitable phase shifts we can get an algorithm that always gives an improvement. As shown in figure 1, when a single iteration derived from any unitary operator U is applied, the state vector *always* moves closer to the target state (Section 3). By recurring this basic iteration, we develop an algorithm with multiple applications of U that converge monotonically to the target (Section 4). This leads to variants of quantum searching that are robust to changes in the parameters (Section 5). Also, this immediately leads to schemes for reducing certain kinds of errors in quantum computing (Section 6).

2 A different kind of quantum search

Consider the following transformation

$$UR_sU^\dagger R_tU\,|s\rangle \tag{1}$$

R_t & R_s denote selective phase shifts of the respective state(s) by $\frac{\pi}{3}$. Note that if we were to change these phase shifts from $\frac{\pi}{3}$ to π, we would get one iteration of the amplitude amplification algorithm [2], [3].

The next section shows that if the U operation drives the state vector from a source (s) to a target (t) state with a probability of $(1-\epsilon)$, i.e. $\|U_{ts}\|^2 = (1-\epsilon)$, then the transformation (1) drives the state vector from the source to the same target state with a probability of $(1-\epsilon^3)$. The deviation from the t state has hence fallen from ϵ to ϵ^3.

The striking aspect of this result is that it holds for *any* kind of deviation from the t state. Unlike the standard amplitude amplification algorithm which would overshoot the target state when ϵ is small (Figure 1); the new algorithm will always move towards the target. As shown in Section 5, this can be used to develop algorithms that are more robust to variations in the problem parameters.

Connections to error correction might already be evident in the previous paragraph. Let us say that we are trying to drive a system from an s to a t state/subspace. The transformation that we have available for this is U which drives it from s to t with a probability $\|U_{ts}\|^2$ of $(1-\epsilon)$, i.e. the probability of error in this transformation is ϵ. Then the composite transformation $UR_sU^\dagger R_tU$ will reduce the error to ϵ^3.

This technique is applicable whenever the transformations U, $U^\dagger$, R_s & R_t can be implemented. This will be the case when errors are systematic errors or slowly varying errors, e.g. due to environmental degradation of some component. This would not apply to errors that come about as a result of sudden disturbances from the environment. It is further assumed that the transformation U can be inverted with exactly the same error (illustrated in Section 6). Traditionally quantum error correction is carried out at the single qubit level where individual errors are corrected, each error being corrected in a separate way. With the machinery of this paper, errors can be corrected without ever needing to identify the error syndrome.

3 Analysis

We analyze the effect of the transformation $UR_sU^\dagger R_tU$ when it is applied to the $|s\rangle$ state. As mentioned in the previous section, R_t & R_s denote selective phase shifts of the respective state(s) by $\frac{\pi}{3}$ (t for target, s for source). We show that if $\|U_{ts}\|^2 = (1-\epsilon)$, then

$$\left\|\langle t|\, UR_sU^\dagger R_tU\, |s\rangle\right\|^2 = \left(1-\epsilon^3\right).$$

In the rest of this section, the greek alphabet θ will be used to denote $\frac{\pi}{3}$.

Start with $|s\rangle$ and apply the operations $U, R_s, U^\dagger, R_t$ & U. If we analyze the effect of the operations, one by one, just as in the original quantum search algorithm [4], we find that it leads to the following superposition:

$$U|s\rangle\left(e^{i\theta}+\|U_{ts}\|^2\left(e^{i\theta}-1\right)^2\right)+|t\rangle U_{ts}\left(e^{i\theta}-1\right).$$

To estimate the deviation of this superposition from $|t\rangle$, consider the amplitude of the above superposition in non-target states. The probability is given by the absolute square of the corresponding amplitude:

$$\left(1-\|U_{ts}\|^2\right)\left\|\left(e^{i\theta}+\|U_{ts}\|^2\left(e^{i\theta}-1\right)^2\right)\right\|^2.$$

Substituting $\|U_{ts}\|^2=(1-\epsilon)$, the above quantity becomes:

$$\begin{aligned}&\epsilon\left\|\left(e^{i\theta}+(1-\epsilon)\left(e^{i\theta}-1\right)^2\right)\right\|^2\\&=\epsilon\left\|\left(-e^{i\theta}+e^{2i\theta}+1\right)-\epsilon\left(e^{i\theta}-1\right)^2\right\|^2\\&=\epsilon^3.\end{aligned}$$

The following sections give two simple applications of the above analysis - the first to searching in the presence of uncertainty and the second to error correction.

4 Recursion

A few years after the invention of the quantum search algorithm [4], [5] it was generalized to a much larger class of applications known as the amplitude amplification algorithms [2], [3]. In these algorithms, the amplitude produced in a particular state t by starting from a state s and applying a unitary operation U, can be *amplified* by successively repeating the sequence of operations: $Q=I_sU^\dagger I_tU$. Here I_s & I_t denote selective inversions of the s & t states respectively. For later reference, note that the amplitude amplification transformation with four queries is:

$$U\left(I_sU^\dagger I_tU\right)\left(I_sU^\dagger I_tU\right)\left(I_sU^\dagger I_tU\right)\left(I_sU^\dagger I_tU\right) \tag{2}$$

If we start from the s state and repeat the operation sequence $I_sU^\dagger I_tU$, η times, then the amplitude in the $U^\dagger|t\rangle$ state becomes approximately $2\eta U_{ts}$

provided $\eta U_{ts} \ll 1$. The quantum search algorithm is a particular case of amplitude amplification with U being the Walsh-Hadamard Transformation (W) and s being the $\overline{0}$ state (state of the system with all qubits in the 0 state). The selective inversions enable the amplitudes produced in the various iterations to add up in phase. The amount of amplification increases linearly with the number of repetitions of Q and hence the probability of detecting t goes up quadratically.

Just like the amplitude amplification transformation, it is possible to recurs the transformation $UR_sU^\dagger R_tU\,|s\rangle$ to obtain larger rotations of the state vector in a carefully-defined two dimensional Hilbert space. This recursion will be described in detail in [13], the basic idea is to define transformations U_m by the recursion:

$$U_{m+1} = U_m R_s U_m^\dagger R_t U_m, \qquad U_0 = U. \tag{3}$$

Unlike amplitude amplification, it is *not* simple to write down the precise operation sequence for U_m with large m without working out the full recursion for all integers less than m. Recursion for each m is different and there is no simple structure. Let us illustrate this for U_2:

$$U_0 = U$$
$$U_1 = U_0 R_s U_0^\dagger R_t U_0 = UR_sU^\dagger R_tU$$

$$\begin{aligned} U_2 = U_1 R_s U_1^\dagger R_t U_1 &= \left(UR_sU^\dagger R_tU\right) R_s \left(UR_sU^\dagger R_tU\right)^\dagger R_t \left(UR_sU^\dagger R_tU\right) \\ &= \left(UR_sU^\dagger R_tU\right) R_s \left(U^\dagger R_t^\dagger U R_s^\dagger U^\dagger\right) R_t \left(UR_sU^\dagger R_tU\right) \\ &= U \left(R_sU^\dagger R_tU\right) \left(R_sU^\dagger R_t^\dagger U\right) \left(R_s^\dagger U^\dagger R_tU\right) \left(R_sU^\dagger R_tU\right) \end{aligned} \tag{4}$$

The corresponding transformation for amplitude amplification is (2).

It is straightforward to show that if $\|U_{ts}\|^2 = 1-\epsilon$, then $\|U_{m,ts}\|^2 = 1-\epsilon^{3^m}$. Expressed as a function of the number of queries (q_m) $\|U_{m,ts}\|^2 = 1-\epsilon^{2q_m+1}$.The failure probability hence falls as ϵ^{2q_m+1} after q_m queries [13]; this is similar to a classical algorithm where the probability of failure falls as ϵ^{q+1} after q queries (a classical algorithm is discussed in Section 5).

4.1 Fixed point of algorithm

First, note that the standard amplitude amplification algorithm (2) and the phase shift algorithm (4), both have some selective operations performed

on the t-state and so from an information theoretic point of view there is no violation in having fixed points. However, unitarity would be violated if there was any kind of accumulation at the target state due to repetition of the same transformation. In amplitude amplification (2), exactly the same transformation is repeated and so unitarity does not permit any fixed point. In the phase shift algorithm (4), which is very similar to amplitude amplification, the transformation repeated in each step is slightly different due to the presence of each of the four operations $R_s, R_t, R_s^\dagger, R_t^\dagger$ and it hence gets around the unitarity condition that prevents amplitude amplification from having a fixed point.

5 Quantum searching amidst uncertainty

The original quantum search algorithm is known to be the best possible algorithm for exhaustive searching [6], [7] therefore no algorithm will be able to improve its performance. However, for applications other than exhaustive searching for a single item, this paper demonstrates that suitably modified algorithms may indeed provide better performance.

Consider the situation where a large fraction of the states are marked, but the precise fraction of marked states is not known. The goal is to find a single marked state with as high a probability as possible in a single query. For concreteness, say some unknown fraction, f , of the states are marked, with f uniformly distributed between 75% and 100% with equal probability.

In the following we show that the probability of failure for the new scheme is approximately one fourth that of the best (possible) classical scheme. Also, it is approximately one fourth of that of the best (known) quantum scheme.

Classical The best classical algorithm is to select a random state and see if it is a t state (one query). If yes, return this state; if not, pick another random state and return that. The probability of failure is equal to that of not getting a single t state in two random picks, i.e. $(1-f)^2$ which lies in the range $(0, 0.06)$. The overall failure probability is approximately 3.12%.

Quantum Searching The best quantum search based algorithm for this problem that I could find in the literature was by Ahmed Younes et al [12]. This finds a solution with a probability of $(1-\cos\theta)\left(\frac{\sin^2(q+1)\theta}{\sin^2\theta}+\frac{\sin^2 q\theta}{\sin^2\theta}\right)$,

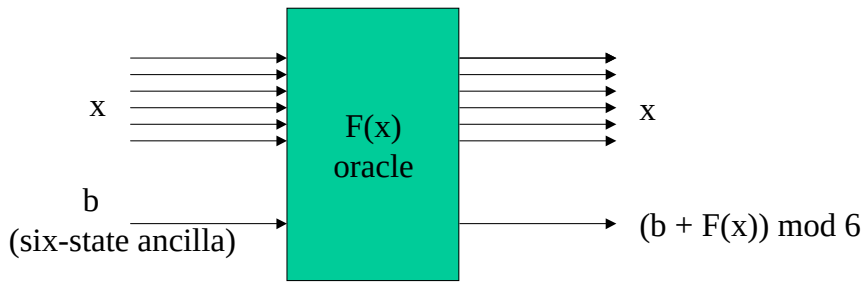

Figure 2: By setting the six-state ancilla, b, to the superposition $\frac{1}{\sqrt{6}}\left(|0\rangle + |1\rangle\,\omega + |2\rangle\,\omega^2 + |3\rangle\,\omega^3 + |4\rangle\,\omega^4 + |5\rangle\,\omega^5\right)$ where $\omega = \exp\left(-\frac{i\pi}{3}\right)$, we get a $\frac{\pi}{3}$ phase-shift of the states for which $F(x) = 1$ relative to those for which $F(x) = 0$. A simpler implementation using binary qubits is presented in [13].

where q = number of queries and $\theta = \arccos(1-f)$ (Equation (59) from [12]). When $q = 1$, the success probability becomes: $f\left(1 + 4(1-f)^2\right)$, this lies in the range: $(0.94, 1)$. The overall failure probability is approximately 3.12%.

New algorithm If we apply the phase shift transformation $UR_sU^\dagger R_tU\,|s\rangle$ (1) with U being the W-H transform (W) and the state s being the $\overline{0}$ state (state with all qubits in the 0 state), then $\|U_{ts}\|^2 = f$, where f lies in the range $(0.75, 1.0)$. In the terminology of the previous section, ϵ is defined by the equation, $\|U_{ts}\|^2 = 1-\epsilon$. Therefore $\epsilon = 1-f$ and after the transformation $WR_sWR_tW\,|0\rangle$, the probability of being in a non-t state becomes ϵ^3 which is equal to $(1-f)^3$, i.e. the chance of a failure lies in the range $(0, 0.0016)$. The overall failure probability is approximately 0.8%.

The performance of the algorithm is graphically illustrated in figure 3(a). In the region of interest of this problem, the graph of the phase shift algorithm lies entirely above that of the graph of [12] everywhere and so the averaged success probability of the phase shift algorithm will clearly be higher. The difference in the two becomes even more dramatic if we consider multiple query algorithms (Figure 3(b)).

In [9], it will be shown that the phase-shift algorithm of this paper, for

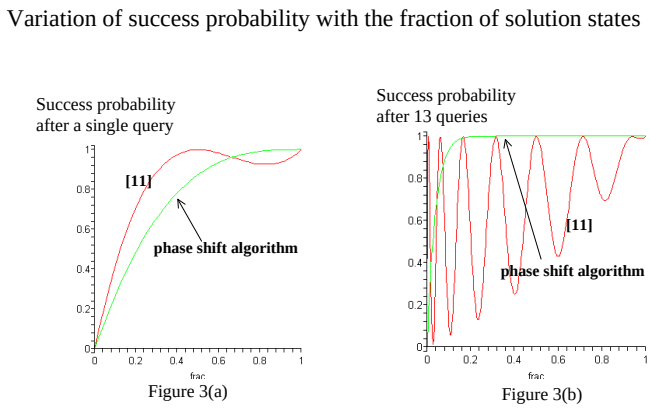

Figure 3: Comparison of the performance of the $\pi/3$ phase shift algorithm with [12], when the fraction of marked states (f), varies between 0 & 1.

the type of problems discussed in this section, is the best possible quantum algorithm asymptotically.

6 Quantum Error Correction

6.1 Background

Von Neumann observed in 1944 that if a certain module had an error probability of ϵ, then the error probability due to this module can be reduced by doing the computation just three times and then deciding which state occurs most often in the output [11]. Assuming a perfect vote, the error probability of the modified scheme is $O\left(\epsilon^2\right)$. The approach of Von Neumann is still intact - add a small amount of redundancy to the circuit by means of which one can infer whether or not the solution is correct. If incorrect, redo the computation. However, in quantum circuits, this approach does not work in the above form due to the different nature of quantum information. It is not possible to observe quantum information without affecting it.

Remarkably, in 1996 Peter Shor & Andrew Steane [14] independently discovered that it was possible to correct small errors in quantum information even within the limitation of the above rules. They both did this by encoding each qubit into multiple qubits in a way that as long as the error affected

any single qubit, it got projected into an orthogonal subspace where it could be identified and corrected. So the principle was established - quantum error correction was possible.

Unfortunately, the error correction provisions are very demanding and considerably increase the complexity of the circuit. There have been several schemes proposed for quantum error correction. Most schemes have the limitation that they require the error per gate to be very small (of the order of 10^{-4}) and/or require a large number of gates. This paper presents a new scheme based on the quantum search algorithm that can be used in conjunction with other schemes to reduce systematic errors.

Let us say that we want to implement a certain transformation U to drive the system into a t state (or subspace) with certainty. However, when U is applied to the starting state s, the probability of reaching t is only $(1-\epsilon)$, i.e. U produces an error of ϵ. Just like Von Neumann had observed for classical circuits, we show that by doing the transformation U three times, we can considerably reduce the error. However, the similarity ends there - the implementation and the error correction technique is very different from classical.

The analysis of Section 3 shows that if we can apply the composite operation $UR_sU^\dagger R_tU\,|s\rangle$, then, by a suitable choice of s & U, we can reduce the error from ϵ to ϵ^3. This implementation thus depends on our ability to efficiently apply the operations U, R_s, $U^\dagger$ & R_t.

The operation U is the one being corrected and we assume that we can apply it two times just as easily. Since quantum gates are reversible, we assume that we can also apply $U^\dagger$ as easily (note that this must reuse the same or very similar hardware as what U did so as to keep the error exactly the same). For systematic errors and slowly varying random errors, this can probably be achieved since we may assume that the circuit parameters stay fixed in time.

R_s & R_t require us to selectively shift the phases of certain states. Shifting the phase of a state is as easy as identifying the presence of the state (Figure 2). This leads to a number of different error-correction schemes, depending on the type of error to be corrected.

To summarize, the error-correction technique requires the following conditions to be satisfied:

1. In case we are correcting errors in a transformation, U, we should be able to apply U twice and $U^\dagger$ once. These transformations must be

applied with exactly the same error as in the original U.

2. We should have a sub-module to distinguish the signal part of the output wavefunction from the error. This is necessary to carry out R_t.

3. Finally, we assume the ability to perform noiseless R_t & R_s operations.

The forthcoming paper [8], shows in detail how the methodology of this paper can be used to design elementary (one & two qubit gates) that perform precisely even in the presence of small errors in R_s & R_t.

6.2 Example - Communicating Classical Bits

We illustrate this error-correction procedure with a simple example. Consider the problem of transmitting classical information over a quantum channel. Although the channel is quantum, the information of interest is classical. Therefore the only portion of the errors that are of concern are the amplitude errors (i.e. bit-flip errors), we do not care about the phase. It is well-known that by adding a single parity bit, we will be able to identify the presence

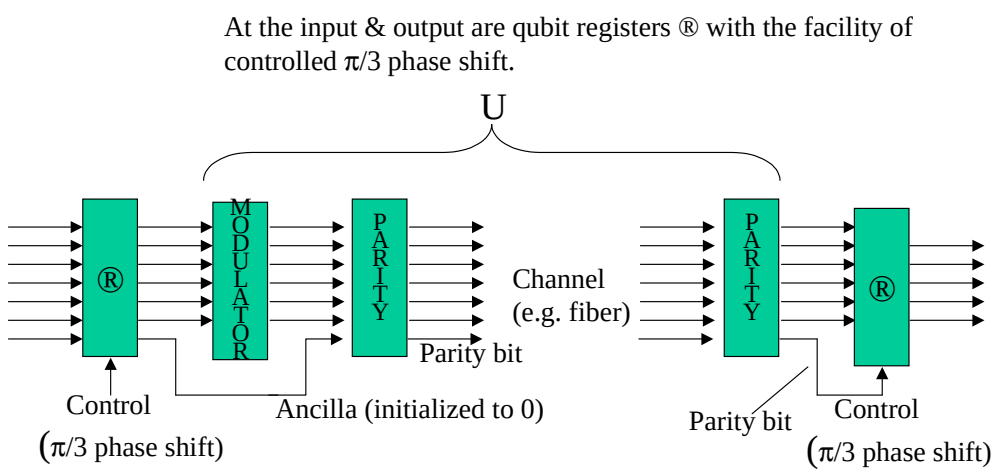

Figure 4 - Redundancy, in the form of a parity bit, helps to detect, and *correct*, single bit-flip errors.

6.2.1 Building blocks

1. The input and output registers have a provision for conditionally shifting the phase of the state of qubits by $\frac{\pi}{3}$.

2. The modulator flips the state of certain qubits depending on the message to be transmitted.

3. There are two parity generators that take as input (η+1) qubits. η of these go on straight to the output, the $(\eta+1)^{th}$ qubit is replaced by the parity of the (η+1) input qubits.

The above components provide the blocks that can be used to implement the operations U, R_s, $U^\dagger$ & R_t and thus the transformation $UR_sU^\dagger R_tU$.

6.2.2 Working

1. The input register is initialized with all $(\eta + 1)$ qubits in the 0 state, one of these is the ancilla qubit. These are sent to the modulator which flips certain qubits depending on the message to be transmitted. The (first) parity generator computes a parity qubit and then transmits the (η+1) qubits through the channel. All this is the transformation U.

2. At the receiving end, the other parity generator computes the parity of the (η+1) qubits and then sends the first η of these into the output register and the $(\eta+1)^{th}$ (parity) qubit into the control signal of the output register. This is the R_t phase shift.

3. $U^\dagger$ follows by propagating the qubits backward all the way from the output register, through the parity generator, channel, parity generator, modulator, all the way to the input register.

4. The input register conditionally shifts the phase if all qubits are in the 0 state thus implementing R_0.

5. Finally the signal is propagated from the input register to the output register again as in step 1 (this constitutes application of the last U in the transformation $\underline{U}R_sU^\dagger R_tU\,|s\rangle$)

Note that when classical information is being transmitted, one parity bit would normally provide the means just to detect single bit-flip errors. The

quantum nature of the scheme enables us to *correct* the error without using any additional qubits.

7 Conclusion

The variant of quantum searching discussed in this paper supplements the original search algorithm by providing a scheme that permits a fixed point and hence moves towards a target state in a more directed way. This new scheme has already led to a robust quantum scheme for quantum searching that is within a constant factor of the most efficient possible. This will be discussed in detail elsewhere [9],[13].

Also it naturally leads to schemes for error correction. This paper mentions an elementary example; a comprehensive scheme is given in [8], where it is shown how to eliminate errors module by module. Other schemes are under development.

One missing aspect is a simple physical explanation of how this scheme actually works. Why does changing the π phase shift in amplitude amplification to a $\frac{\pi}{3}$ phase shift, convert the algorithm into something so different? It would be insightful to have an explanation similar to those for amplitude amplification . This will be discussed further in [13], [9].

References

[1] G. Brassard, "Searching a quantum phone book", Science, Vol. 275, p. 627, 1/31/1997.

[2] G. Brassard and P. Hoyer, "An exact quantum polynomial-time algorithm for Simon's problem", Proceedings of Fifth Israeli Symposium on Theory of Computing and Systems (ISTCS'97), Ramat-Gan, Israel, June 1997, 12–23, quant-ph/9704027.

[3] L. K. Grover, "Quantum computers can search rapidly by using almost any transformation", Phys. Rev. Letters, 80(19), 1998, 4329-4332.

[4] L. K. Grover, "Quantum Mechanics helps in searching for a needle in a haystack", *Phys. Rev. Letters*, 78(2), 325, 1997.

[5] L. K. Grover, "From Schrodinger's Equation to the Quantum Search Algorithm", American Journal of Physics, July 2001.

[6] C. H. Bennett, E. Bernstein, G. Brassard & U.Vazirani, "Strengths and weaknesses of quantum computing," SIAM Journal on Computing, 26, no. 5, Oct. 1997, p. 1510-1524.

[7] C. Zalka, "Grover's quantum searching is optimal," Phys. Rev. A 60, 2746 (1999).

[8] B. Reichardt & L.K. Grover, "Quantum error correction of systematic errors using a quantum search framework," manuscript in preparation.

[9] Sourav Chakraborty, Jaikumar Radhakrishnan, Nanda Raghunathan, "The optimality of Grover's recent quantum search algorithm," manuscript in preparation.

[10] Tathagat Tulsi, "Quantum search with different phase rotations," manuscript in preparation.

[11] J. Von Neumann, "Probabilistic logics and the synthesis of reliable organisms from unreliable components," Automata Studies, p. 329-378, Princeton University Press, 1956.

[12] Ahmed Younes, Jon Rowe, Julian Miller, "Quantum Search Algorithm with more Reliable Behavior using Partial Diffusion," quant-ph/0312022.

[13] "Implementing quantum search with different phase rotations," manuscript under preparation.

[14] Chuang & Nielsen, "Quantum Information & Computing", Cambridge University Press, 2000.